Notes:
Mounting: Panel Mount
Input: 12vdc
Output: 12vdc
Amps: 20A MAX
Connection: Terminals (2)

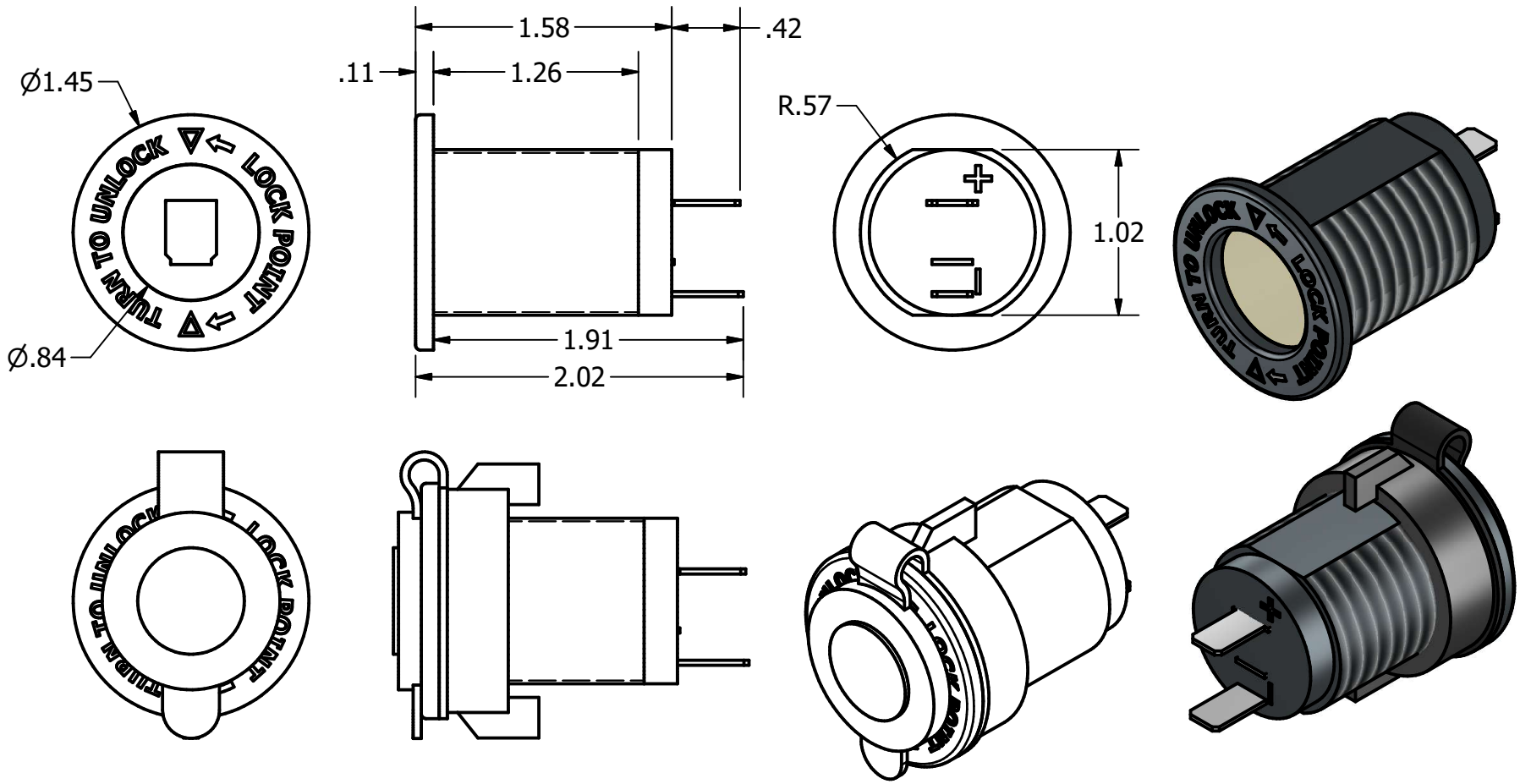

REV	DESCRIPTION	BY	DATE

STELLAR LIGHTING

DESCRIPTION: SOCKET - 12V CHARGING OUTLET - CYLINDER ONLY			
PART #: 1205059		DWG #: 1250509.idw	
SCALE: NA	UNIT OF MEASURE: IN	DWG SIZE: A	NOTE:
DATE CREATED: 5-24-22	DRAWN BY: RSH	SHEET: 1	REV: